Instrumentation Quick - Connects

SQC SERIES

Features

- Simple push-pull action to connect and disconnect lines-no tools required.
- Plug and body are available valved or unvalved. valves automatically open when connected and shut off when disconnected to minimize the loss of liquids or gases.

Table of Dimensions

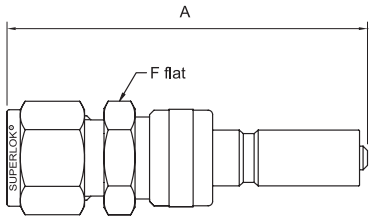

Plug

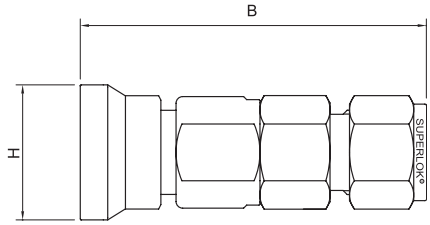

Body

Plug

Part Number			Cv		End Connection	A		F
			SO	DO	Type	SO	DO	
SQC1P -SO	SQC1P -DO	S2	0.08	0.08	1/8″ Superlok		70.4	15.9
		S4	0.4	0.2	1/4″ Superlok		61.5	
		S6M			6mm Superlok			
		M2N			1/8″ Male NPT		54.1	
		M4N(R)			1/4″ Male NPT(PT)		57.9	
		F2N			1/8″ Female NPT		52.6	
		F4N(R)			1/4″ Female NPT(PT)		58.9	19.1
SQC2P -SO	SQC2P -DO	S6	1.5	0.5	3/8″ Superlok		67.1	19.1
		S10M			10mm Superlok		70.4	
		M4N			1/4″ Male NPT		61.9	
		M6N(R)	1.6	0.5	3/8″ Male NPT(PT)		62.7	
		F4N	1.5	0.5	1/4″ Female NPT			
		F6N(R)	1.6	0.5	3/8″ Female NPT(PT)			22.2
SQC3P -SO	SQC3P -DO	S8	3.3	1.5	1/2″ Superlok		80.3	23.8
		S12M			12mm Superlok			
		M8N(R)	3.1	1.3	1/2″ Male NPT(PT)		77.2	
		F8N(R)			1/2″ Female NPT(PT)		76.7	27.0

- SO : Single shutoff type
- DO : Double shutoff type

Body

Part Number		End Connection	B	H
		Type		
SQC1B	S2	1/8″ Superlok	57.4	23.1
	S4	1/4″ Superlok	58.4	
	S6M	6mm Superlok		
	M2N	1/8″ Male NPT	51.1	
	M4N(R)	1/4″ Male NPT(PT)	56.9	
	F2N	1/8″ Female NPT		
	F4N(R)	1/4″ Female NPT(PT)	61.5	
SQC2B	S6	3/8″ Superlok	65.5	26.2
	S10M	10mm Superlok	68.1	
	M4N	1/4″ Male NPT	60.5	
	M6N(R)	3/8″ Male NPT(PT)		
	F4N	1/4″ Female NPT	64.5	
	F6N(R)	3/8″ Female NPT(PT)	65.3	
SQC3B	S8	1/2″ Superlok	78.5	30.7
	S12M	12mm Superlok		
	M8N(R)	1/2″ Male NPT(PT)	75.4	
	F8N(R)	1/2″ Female NPT(PT)	81.8	

· All dimensions in millimeters unless specified as “inch”. Dimension are for reference only, subject to change

Materials of Construction

Component	Material
Body	SS316/A276
Housing	
Double shut off stem	
Double shut off stem retainer	
Body valve	
Body insert	
Single shut off stem retainer	
O-ring	Viton
Spring	SS304
Body sleeve	SS316/A276
Plug sleeve	
Locking Balls	

Pressure-Temperature Ratings

Temperature ˚F (℃)	316 SS with Fluorocarbon FKM O-ring		
	SQC 1	SQC 2	SQC 3
	Pressure Rating, coupled, psig (bar)		
70 (20)	3000 (206)	1500 (103)	750 (51.6)
400 (204)	250 (17.2)		

Maximum Flow Rate Water at 70˚F (20℃)

Series	SQC 1	SQC 2	SQC 3
U.S gal/min	4	6	10
L/min	15	22	37

Insertion Depth

Series	Depth, in.(mm)	
	SO	DO
SQC 1	1.09(27.7)	1.15(29.2)
SQC 2	1.18(30.0)	1.30(33.0)
SQC 3	1.48(37.6)	1.68(42.7)

Overall Length

To calculate overall length in the coupled position, subtract the insertion depth from any overall plug and body combination lengt

Spillage

Spillage is the amount of system fluid that escapes when a quick-connect is uncoupled (double shut off only)

Series	SPILLAGE
SQC 1	0.3 cm^3
SQC 2	1.0 cm^3
SQC 3	3.0 cm^3

Option

BODY & PLUG PROTECTOR

Body & Plug Protectors guard against damage and contaminants when bodies and plug are uncoupled.

Series	Ordering Number	
	Body Protector	Plug Protector
SQC 1	SQC1 - BP	SQC1 - PP
SQC 2	SQC2 - BP	SQC2 - PP
SQC 3	SQC3 - BP	SQC3 - PP

Ordering Information

Example :

SQC2P	-	S	6	-	DO	-	SS
1		2	3		4		5

1. Body Series

SQC1B
SQC2B
SQC3B

Plug Series

SQC1P
SQC2P
SQC3P

2. End Connection

S : SUPERLOK Tube Fittiing
F : Female Thread
M : Male Thread

3. End Connection Size

Tube O.D Designation

Tube O.D (inch)	1/4	3/8	1/2
Designation	4	6	8
Tube O.D (mm)	6	10	12
Designation	6M	10M	12M

Pipe Thread Designation

Size (inch)	1/8	1/4	3/8	1/2
Screwed BSPT	2R	4R	6R	8R
Screwed NPT	2N	4N	6N	8N

4. Plug Type

SO : Single Shutoff Type
DO : Double Shutoff Type

5. Body Material

SS : 316 Stainless Steel
B : Brass

Full Flow Quick - Connects

SFQC SERIES

Features

- Proven ball - lock mechanism provids positive connection.
- Simple push - pull action to connect and disconnect lines - no tools required.
- Compact coupling offers full without orifice restrictions.
- O-ring is easily replaced without disassembling body.

Table of Dimensions

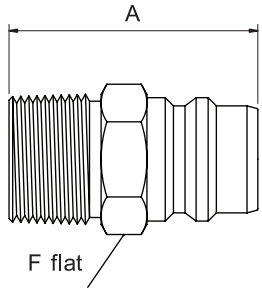

Plug

Part Number		End Connection Type	Cv	Min Orifice	A	F
SFQC2P	S4	1/4″ Superlok	2.2	4.8	45.0	14.3
	S6	3/8″ Superlok	2.8	6.1		17.5
	M4N(R)	1/4″ Male NPT	1.7		40.4	14.3
	M6N(R)	3/8″ Male NPT(PT)				17.5
	M4G	1/4″ Male PF			40.6	19.1
	F4N(R)	1/4″ Female NPT(PT)				
	F6N(R)	3/8″ Female NPT(PT)			42.4	22.2
	F4G	1/4″ Female PF			40.6	19.1
SFQC3P	S6	3/8″ Superlok	2.9	7.1	47.8	22.2
	S8	1/2″ Superlok	13.0	10.4	50.5	
	M6N(R)	3/8″ Male NPT(PT)	7.1	10.4	41.9	
	M8N(R)	1/2″ Male NPT(PT)	11.5	12.7	46.7	
	M8G	1/2″ Male PF	11.5		46.2	27.0
	F6N(R)	3/8″ Female NPT(PT)	7.1	11.9	40.4	
	F8N(R)	1/2″ Female NPT(PT)	11.5	12.7	46.2	
	F8G	1/2″ Female PF	11.5			
SFQC4P	S12	3/4″ Superlok	26.0	15.7	54.6	27.0
	M12N(R)	3/4″ Male NPT(PT)	23.6	18.3	51.6	
	F12N(R)	3/4″ Female NPT(PT)			52.8	33.3
SFQC5P	S16	1″ Superlok	45.0	22.4	62.2	34.9
	M16N(R)	1″ Male NPT(PT)	39.0		59.7	
	F16N(R)	1″ Female NPT(PT)			63.2	41.3

• All dimensions in millimeters unless specified as “inch”. Dimension are for reference only, subject to change

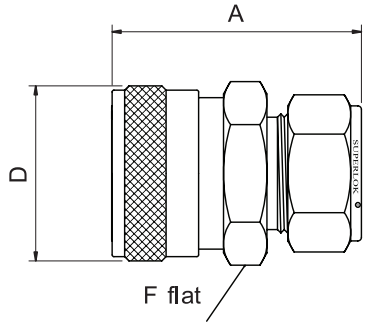

Body

Ordering Number		End Connection	Cv	Min Orifice	A	F
Body Series		Type				
SFQC2B	S4	1/4″ Superlok	8	45.7	22.2	17.5
	S6	3/8″ Superlok	7.1	46.0		
	M4N(R)	1/4″ Male NPT	6.4	40.0		
	M6N(R)	3/8″ Male NPT(PT)	9.4			
	M4G	1/4″ Male PF	6.1	45.7		19.1
	F4N(R)	1/4″ Female NPT(PT)	9.7	38.1		
	F6N(R)	3/8″ Female NPT(PT)		41.4		22.2
	F4G	1/4″ Female PF		38.1		19.1
SFQC3B	S6	3/8″ Superlok	7.1	55.1	33.0	27.0
	S8	1/2″ Superlok	11.9	56.6		
	M6N(R)	3/8″ Male NPT(PT)	10.4	46.5		
	M8N(R)	1/2″ Male NPT(PT)	12.7	52.8		
	M8G	1/2″ Male PF	11.9			
	F6N(R)	3/8″ Female NPT(PT)	15.0	43.9		
	F8N(R)	1/2″ Female NPT(PT)	16.0			
	F8G	1/2″ Female PF				
SFQC4B	S12	3/4″ Superlok	15.7	62.2	42.6	38.1
	M12N(R)	3/4″ Male NPT(PT)	18.3	59.2		
	F12N(R)	3/4″ Female NPT(PT)	22.4	48.0		
SFQC5B	S16	1″ Superlok	22.4	70.0	49.0	44.5
	M16N(R)	1″ Male NPT(PT)		67.3		
	F16N(R)	1″ Female NPT(PT)	26.9	53.8		

• All dimensions in millimeters unless specified as “inch”. Dimension are for reference only, subject to change

Materials of Construction

Component	Material	
	316 SS	Brass
Body	SS316/A276	Brass / B16
Sleeve		
Locking ball		
Spring	SS304	
Sanp ring		
O - ring	Viton	NBR
Plug	SS316/A276	Brass / B16

Pressure-Temperature Ratings

Temperature ˚F (℃)	316 SS with Viton 0 - ring				Brass with NBR 0 - ring			
	SFQC 2	SFQC 3	SFQC 4	SFQC 5	SFQC 2	SFQC 3	SFQC 4	SFQC 5
	Pressure Rating, coupled, psig (bar)							
70 (20)	6000 (413)		4000 (275)		4000 (275)	3000 (206)	2000 (137)	
250 (121)					100 (6.8)			
400 (204)	100 (6.8)							

Insertion Depth

Series	Depth, in (mm)
SFQC2	0.78 (19.8)
SFQC3	0.81 (20.6)
SFQC4	0.90 (23.0)
SFQC5	0.94 (23.9)

Option

BODY & PLUG PROTECTOR

Body & Plug Protectors guard against damage and contaminants when bodies and plug are uncoupled.

Series	Ordering Number	
	Body Protector	Plug Protector
SFQC 2	SFQC2 - BP	SFQC2 - PP
SFQC 3	SFQC3 - BP	SFQC3 - PP
SFQC 4	SFQC4 - BP	SFQC4 - PP
SFQC 5	SFQC5 - BP	SFQC5 - PP

Ordering Information

Example : **SFQC4B - M 12N - SS**

1 2 3 4

1. Body Series / Plug Series

Body Series	Plug Series
SFQC2B	SFQC2P
SFQC3B	SFQC3P
SFQC4B	SFQC4P
SFQC5B	SFQC5P

2. End Connection

S : SUPERLOK Tube Fittiing

F : Female Thread

M : Male Thread

3. End Connection Size

Tube O.D Designation

Tube O.D (inch)	1/4	3/8	1/2	3/4	1
Designation	4	6	8	12	4
Tube O.D (mm)	6	10	12	20	25
Designation	6M	10M	12M	20M	25M

Pipe Thread Designation

Size (inch)	1/4	3/8	1/2	3/4	1
Screwed BSPT	4R	6R	8R	12R	16R
Screwed NPT	4N	6N	8N	12N	16N
Screwed BSPP	4G	6G	8G	12G	16G

4. Body Material

SS : 316 Stainless Steel

B : Brass